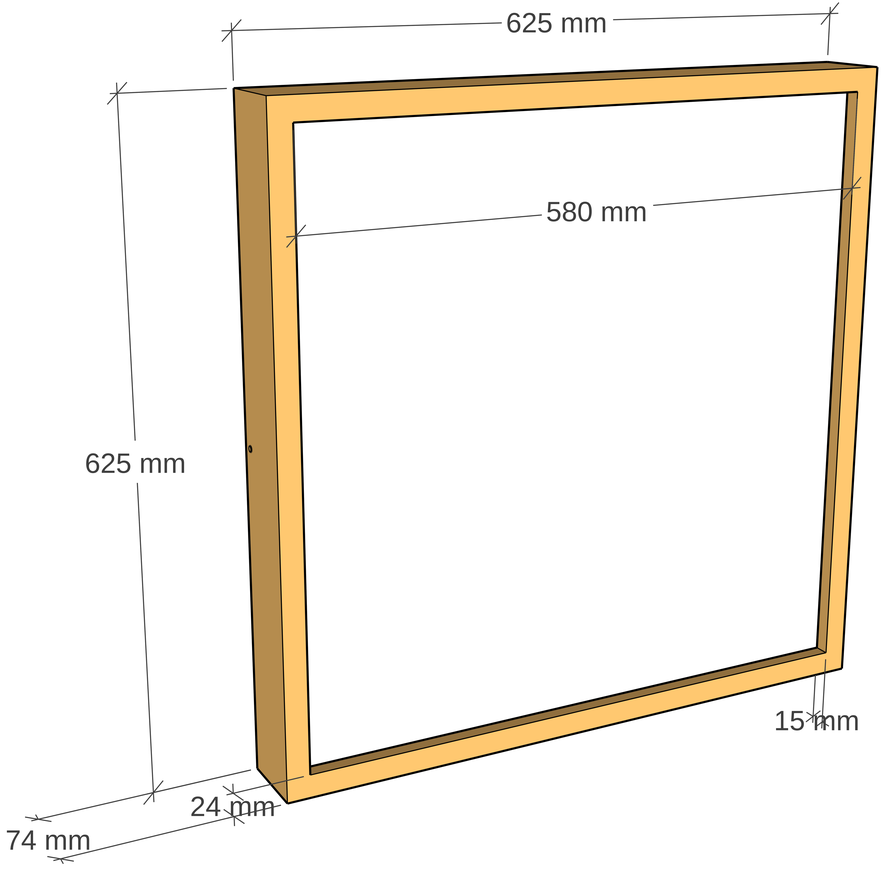
625 mm
580 mm
625 mm
15 mm
24 mm
74 mm